
# EPM MATERIAL

# FABRICATION OF POLYMERIC SHIM PLATES FOR INSTALLATION OF SHIPBOARD EQUIPMENT

JOINT STOCK CORPORATION
SHIPBUILDING & SHIPREPAIR
TECHNOLOGY CENTER

Pursuant to decree of the Ministry of Industry and Trade of the Russian Federation No.661 dated 31.03.2015 “Approval of import replacement measures in the shipbuilding industry of the Russian Federation”, JSC SSTC developed polymeric material “EPM” and application technology therefor. This material is intended for fabrication of shim plates and cylinder-shaped compensators for shipbuilding, automotive and other industries during equipment installation. EPM material is oil-and-petrol resistant and can be utilized both in fresh and seawater. EPM exploitation conditions comply with category OM-1 as per GOST 15150.

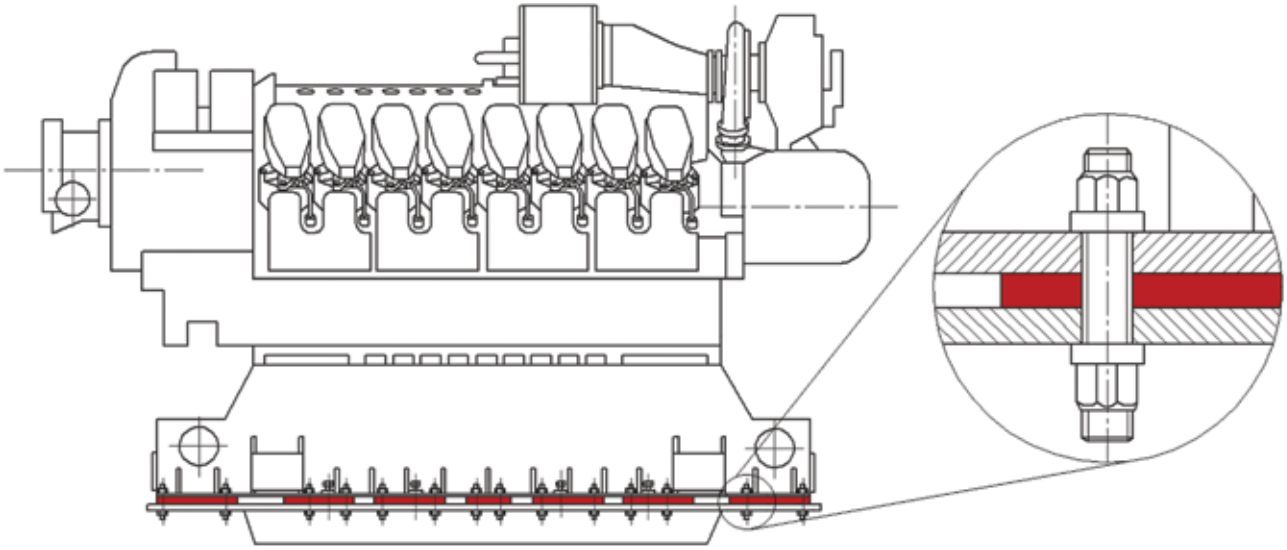

JSC SSTC delivers EPM material in form of two ready-to-use components as per TU 2225-093-07502259-2014. Overall net weight – 6,6 kg, overall volume – 4 l. Other package types to be discussed.

EPM material has been approved and obtained the following:

- Certificate of standard approval by Russian Maritime Registry of Shipping No.18.00081.314 dated 23.04.2018;
- Conclusion of SRI for shipbuilding and armament of N.G. Kuznetsov Naval Academy dated 07.10.2019;
- Decision of interdepartmental commission on acceptance of non-metallic materials acting under R&D center “Kurchatovsky Institute – CSRI Prometey”, to be utilized on the ships of the Russian Navy (this document recommends replacement of ZhM-150PK material previously developed by JSC SSTC and its analogues with EPM materials as per TU 2225-093-07502259-2014);
- Finalization of documents for EPM materials with North-West affiliate of Russian River Registry.

# PHYSICAL AND MECHANICAL PROPERTIES OF EPM MATERIAL

| | |
|---|---|
| Density, kg/m$^3$ | 1650±50 |
| Compressive strength, MPa | ≥ 140,0 |
| Rupture strength, MPa GOST-11262 | ≥ 40 |
| Bending strength, MPa GOST-4648-2014 | ≥ 70 |
| Breaking strength, MPa GOST 14760-69 | ≥ 30 |
| Barcol hardness (at a temperature of 20°C) GOST P 56761 | ≥ 50 |
| Ball hardness, MPa | ≥ 240 |
| Compressive module (at a temperature of 20°C), MPa | ≥ 5150 |
| Poisson ratio (at a temperature of 20°C) | 0,31 |

For better compounding and acquisition of stated performance, one is recommended to utilize mixing heads made by JSC SSTC.

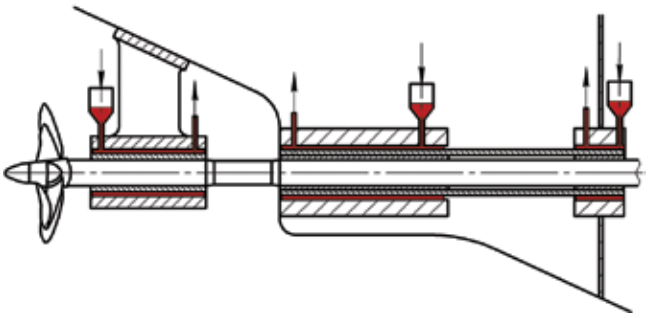

EPM material outperforms currently utilized ZhM-150PK and matches foreign analogues approved for use by Russian Maritime Registry of Shipping. That said, price of EPM material is much lower than price of import analogues.

This technology envisages replacement of conventional steel ship plates with polymeric ones. Installation procedure lies in filling flat or cylindrical gaps with liquid EPM material with subsequent hardening.

General advantages:

- Significant reduction (by 60-70%) of timelines, labor intensity and cost for installation of fixing assemblies for shipboard equipment;
- Foundation machining as well as fabrication, fitting and measurement of steel shim plates are no longer required;
- Boring and fitting works of supports for shaft line and rudders at building berth are no longer required. This excludes the necessity to fabricate or procure complex and expensive boring machines and devices.

JSC SSTC offers:

- Delivery of EPM material, personnel training and certification;
- Supervised installation onboard the ship;
- Calculations finalized with RMRS.

Documentation:

- Technical specifications for material ТУ 2225-093-07502259-2014;
- User manual for EPM material, ГКЛИ. 3330-099-2018.

The above material is currently utilized by the following enterprises:

– JSC “Vympel Shipyard”

– JSC ”Kaluga turbine plant”;

– JSC “Oka shipyard”

– LLC “Fordewind”;

– JSC “Krasnoe Sormovo Shipyard”

РОССИЙСКИЙ МОРСКОЙ РЕГИСТР СУДОХОДСТВА
RUSSIAN MARITIME REGISTER OF SHIPPING

6.8.3

**СВИДЕТЕЛЬСТВО О ТИПОВОМ ОДОБРЕНИИ**
**TYPE APPROVAL CERTIFICATE**

Изготовитель / Manufacturer: АО "ЦЕНТР ТЕХНОЛОГИИ СУДОСТРОЕНИЯ И СУДОРЕМОНТА" / JOINT STOCK COMPANY "SHIPBUILDING & SHIPREPAIR TECHNOLOGY CENTER"

Адрес / Address: Россия, 198095 Санкт-Петербург, ул.Промышленная, 7 / Russia, 198095 Saint-Petersburg, st.Promyshlennaya, 7

Изделие / Product: Материал полимерный компенсаторный "ЭПМ" / Двухкомпонентный полимерный материал на основе эпоксидной смолы

Polymeric material for shockfoot "ЭПМ" / Two component polymer on the base of epoxy

Код номенклатуры / Code of nomenclature: 13300000

Мы, нижеподписавшиеся, в присутствии испытаний удостоверяем, что вышеуказанный продукт изготовлен в соответствии с требованиями Российского морского регистра судоходства.
This is to certify that the item of the survey and tests carried out the above mentioned product complied with the requirements of Russian Maritime Register of Shipping.

6.1 Часть XIII, Правил классификации и постройки морских судов, 2018; 5.2, Часть V, Правил технического наблюдения за постройкой судов и изготовлением материалов и изделий для судов, издание 2017
6.1 Part XIII of Rules for the Classification and Construction of Sea-Going Ships 2018;
Item 5.2, Part V, Rules for Technical Supervision during Construction of Ships and Manufacture of Materials for Ships, Edition 2017.

Настоящее Свидетельство о типовом одобрении действительно до / This Type Approval Certificate is valid until: 23.04.2023

Настоящее Свидетельство о типовом одобрении теряет силу в случаях, установленных в Правилах технического наблюдения за постройкой судов и изготовлением материалов и изделий для судов.
This Type Approval Certificate becomes void in cases indicated in Rules for the Technical Supervision during Construction of Ships and Manufacture of Materials and Products.

Дата выдачи / Date of issue: 23.04.2018 № 18.00081.314

Российский морской регистр судоходства / Russian Maritime Register of Shipping

Клименюк М.А., Начальник М.А.

(Фамилия, инициалы / Name)

*Дополнительная информация см. на обороте / Additional information on overleaf

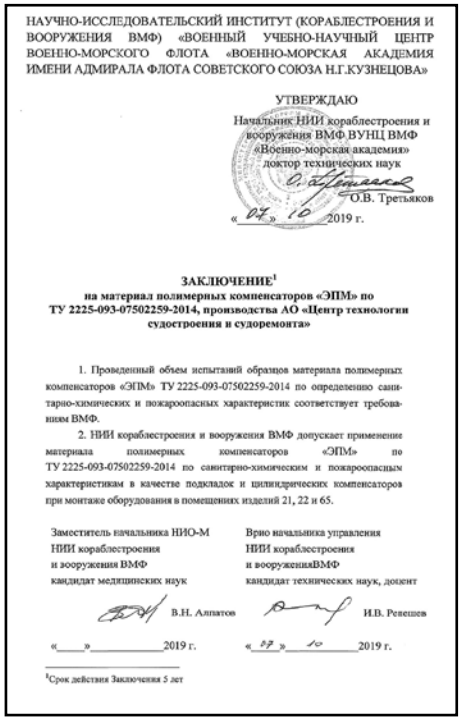

НАУЧНО-ИССЛЕДОВАТЕЛЬСКИЙ ИНСТИТУТ (КОРАБЛЕСТРОЕНИЯ И ВООРУЖЕНИЯ ВМФ) «ВОЕННЫЙ УЧЕБНО-НАУЧНЫЙ ЦЕНТР ВОЕННО-МОРСКОГО ФЛОТА «ВОЕННО-МОРСКАЯ АКАДЕМИЯ ИМЕНИ АДМИРАЛА ФЛОТА СОВЕТСКОГО СОЮЗА Н.Г.КУЗНЕЦОВА»

УТВЕРЖДАЮ
Начальник НИИ кораблестроения и вооружения ВМФ ВУНЦ ВМФ «Военно-морская академия» доктор технических наук
О.В. Третьяков
«07» 10 2019 г.

**ЗАКЛЮЧЕНИЕ**[1]
**на материал полимерных компенсаторов «ЭПМ» по ТУ 2225-093-07502259-2014, производства АО «Центр технологии судостроения и судоремонта»**

1. Проведенный объем испытаний образцов материала полимерных компенсаторов «ЭПМ» ТУ 2225-093-07502259-2014 по определению санитарно-химических и пожароопасных характеристик соответствует требованиям ВМФ.

2. НИИ кораблестроения и вооружения ВМФ допускает применение материала полимерных компенсаторов «ЭПМ» по ТУ 2225-093-07502259-2014 по санитарно-химическим и пожароопасным характеристикам в качестве подкладок и цилиндрических компенсаторов при монтаже оборудования в помещениях изделий 21, 22 и 65.

| | |
|---|---|
| Заместитель начальника НИО-М НИИ кораблестроения и вооружения ВМФ кандидат медицинских наук | Врио начальника управления НИИ кораблестроения и вооруженияВМФ кандидат технических наук, доцент |
| В.Н. Алпатов | И.В. Ренешев |
| «____» _____ 2019 г. | «07» 10 2019 г. |

[1]Срок действия Заключения 5 лет

7, Promyshlennaya Street, St. Petersburg, 198095, RUSSIA
Phone: +7 (812) 786-2610, Fax: +7 (812) 786-0459
e-mail: inbox@sstc.spb.ru **www.sstc.spb.ru**